INDUSTRIAL DEHUMIDIFIER

MODEL: A-ONE45L,A-ONE50L, A-ONE70L,
A-ONE90L

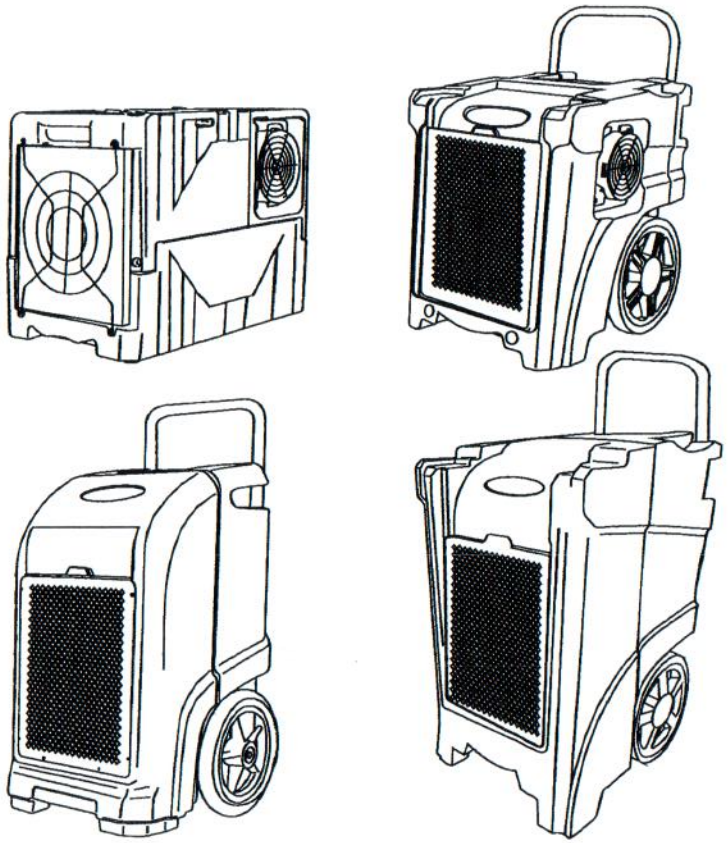

INSTRUCTION MANUAL

SAVE THESE INSTRUCTIONS FOR FUTURE REFERENCE

Packaging

Please DO NOT dispose of any packaging until you have checked the appliance is operational.

After removing the packaging ensure the contents are intact and complete. In the unlikely event of missing parts; contact your retailer.

DO NOT leave children unattended with any of the packaging since it is a potential source of danger. Disposal of all packaging must be carried out responsibly & safely and in accordance with your local authority regulations.

ALWAYS recycle the packaging material where possible.

When using any electrically powered product, basic safety precautions should always be followed.

PLEASE READ THE INSTRUCTIONS CAREFULLY AND IN FULL BEFORE USING THE PRODUCT.

IMPORTANT INSTRUCTIONS

WARNING - to reduce the risk of fire, electrical shock or injury to persons or property:

1. Always operate the product from a power source of the same voltage, frequency and rating as indicated on the product identification plate.
2. Close supervision is necessary when any product is used by or near children the elderly or the infirm. Do not allow children to use the appliance as a toy.
3. Do not operate this product with a damaged power cord plug. If the supply cord is damaged it must be replaced by qualified personnel or other similar qualified persons in order to avoid hazard.
4. To reduce the risk of electric shock, do not expose the unit or flexible cord to moisture of any kind.
5. Switch off and unplug from the power socket when not in use, before assembling or before cleaning.
6. Do not place objects on the product or allow objects to obstruct the inlet or outlet openings, or operate in close proximity to walls or curtains, etc.
7. The use of attachments or accessories not recommended or sold by the product distributor may cause injury to persons or damage to property.
8. This product is intended for normal light commercial use only.
9. Do not attempt to dismantle the appliance.
10. Do not operate the appliance on a metal surface.
11. Do not use the appliance in artificially hot or humid conditions or allow to be used in a hazardous environment.
12. Do not clean the appliance with organic solvent.
13. This appliance is not intended for use by persons (including children) with reduced physical, sensory or mental capabilities, or lack of experience and knowledge unless they have been given supervision or instruction concerning use of the appliance by a person responsible for their safety.
14. Children should not be left unsupervised with the appliance .
15. This instruction manual is an integral part of the appliance and should be stored for safe keeping and must always accompany the appliance in the event of ownership transfer or for reference to by a service engineer.

READ AND SAVE THESE INSTRUCTIONS

PRODUCT INENTIFICATION

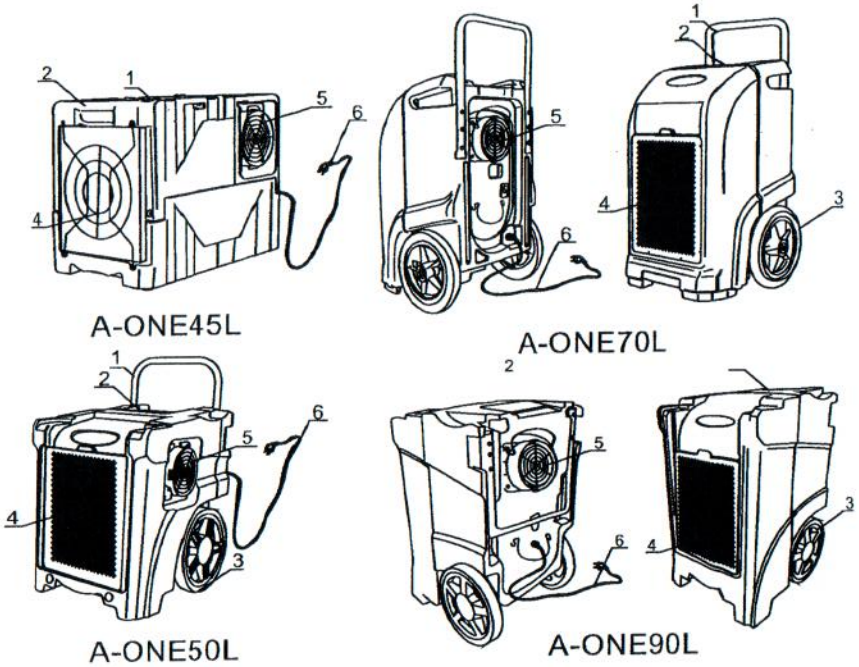

1 Metal Handle
2 Control Panel
3 Wheels
4 Air Inlet Grille
5 Air Outlet Grille
6 Power Cord

⚠ WARNING

DO NOT OBSTRUCT THE AIR INLET OR OUTLET.

SETTING UP INSTRUCTIONS

⚠ IMPORTANT

Place dehumidifier in the upright position. When transporting a dehumidifier to site, allow the dehumidifier to stand for 30 minutes before switching ON. This is necessary to allow the refrigerant system to stabilise and avoid system damage .

SETTING UP THE DEHUMIDIFIER: Operate the dehumidifier in an enclosed area, as this creates a drying chamber. Close all doors, windows or areas that open to external areas, to maximize the dehumidifier's water removal efficiency. Keep traffic through the drying chamber to a minimum. Place the dehumidifier in the centre of the room away from walls and furnishings. DO NOT allow the airflows to be obstructed.

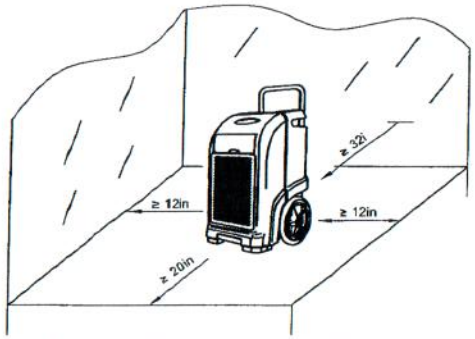

Illustration of correct positioning for best performance

DRAINAGE: The dehumidifier pump connects to a plastic drainage hose. The hose is stored on the back of the appliance. Uncoil the entire hose ensuring there are no kinks or restrictions and place the unattached end into a water vessel or run to outdoors.

Ensure that water which runs to outdoors does NOT create a slip hazard.

Water vessels MUST be checked regularly where used.

SETTING UP INSTRUCTIONS

*** The position of drain water pipe would not be too high (≤15ft). Failure to do so may cause a water backup in the pump resulting in leakage.**

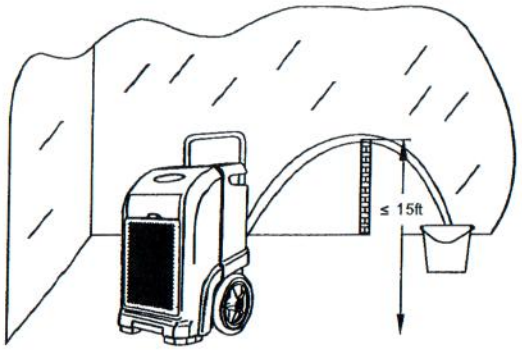

CONTROL PANEL

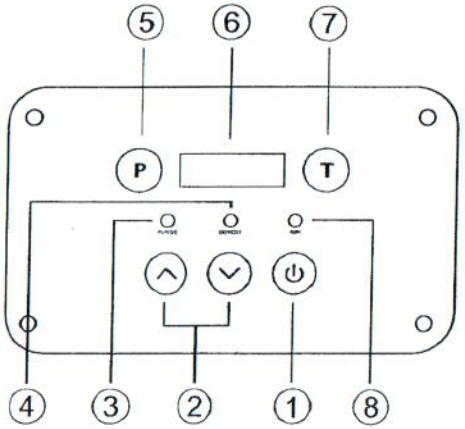

1. ON/OFF Key
2. UP AND DOWN Key
3. Purging Indicator
4. Defrosting Indicator
5. PURGE Key
6. HUMIDITY AND TIME Display
7. TIME Key
8. Operating Indicator

CONTROL PANEL

A. (⏻) **ON/OFF**: Press the ON/OFF key to turn the unit ON or OFF.

B. (P) **PURGE:** Press the PURGE key to empty water from the pump reservoir. During normal operation the pump purges automatically when the reservoir is full. Use 'PURGE' before moving the machine to avoid water spillage. The pump will close automatically after forty seconds continuous operation.

C. (∧) and (∨) :
Press (∧) and (∨) key to set or adjust humidity in the range between 26% and 90%. When the environmental humidity is below 26% "CO" will be displayed.

D. (T) **TIME**: Display working hours and totally working time After turning on operation, it can display setting humidity(left) and current humidity(right), and humidity could be changed by pressing "Up and Down". for the current time, and the time unit is based on minutes, for example, if it displays "0000:50", it means that it has worked for 50 minutes this time. If you want to view the totally working time, please press "T" once more, and it will shows for 10s and returns automatically to the original working hours. If you press "T" before it has lasted for 10s, it also can turn to the original working hours.
If the unit is in power but not in operation, LED will displays nothing, and in this condition, the working hours at the last time will be showed for 10s if "T" is pressed one time. But within 10s, if "T" is pressed again, the totally working time will be showed for also 10s, and within 10s, if there is no action, LED will automatically turn down. In addition, if "T" is pressed again when LED displays the totally working time, LED will turn down immediately. What's more, the current working time will be deleted by pressing "T" for 5s continuously, and the time will be recounted, but the deleted time will be added into the totally working time.

E. Defrost Indicator
The unit begins to defrost when the defrost indicator lights; the unit stops defrosting when the defrost indicator is off. When defrosting finishes, the unit begins to dehumidify automatically again.
Note: The totally working time can not be deleted, if the time is beyond the range of LED showing time, it will be deleted and recount from the start.

OPERATING INSTRUCTIONS

A、Operation for general use:

I、Press the ON/OFF key to turn the unit on ,it will get into working mode automatically.

II、After using, press ON/OFF key t turn the unit off, while water pump will turn on automatically for 40 seconds to drain the rest water ,and turn off automatically.

Note:

Attention:

DO NOT switch the power **OFF** by disconnecting at the mains socket outlet.
To avoid water spillage; **DO NOT** move the dehumidifier for at least three minutes after turning the power **OFF**.

B、key lock function

If the keys of "T" and "purge" are pressed for 2s at the same time, the defrost light will keep shining at the speed of 50Hz, and all the keys on the control panel will be in lock, but it can be unlock by the same action again.

C. Pipe function

As to a much wetter space, use a plastic pipe with diameter larger than 6.7in, and tie the pipe to hood, it will be much faster and more effective to make it dry.

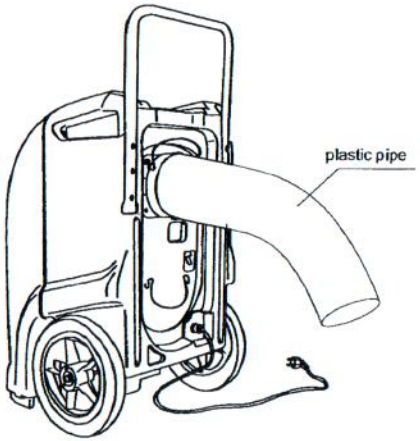

Maintenance CLEANING THE AIR FILTER

Ensure the dehumidifier is turned OFF and the plug is removed from the power socket before maintenance is carried out.

The working performance of the dehumidifier will be greatly reduced if the filters become blocked.

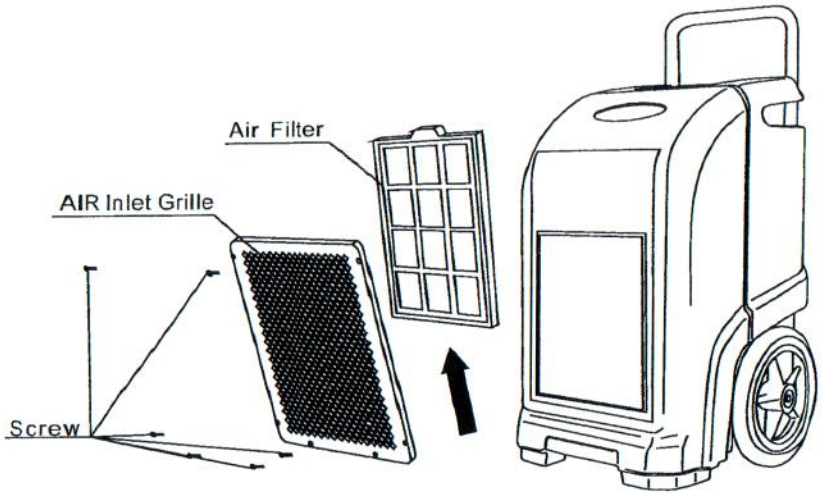

a. Remove two knobs.
b. Remove the air inlet grille as shown above.
c. Remove the filter as shown above.
d. Vacuum any debris from the filter using the vacuum hose and nozzle attachment.
e. Using luke-warm water and a mild detergent wash the filter and allow to dry.
f. Once dry, re-install the filter into the dehumidifier.

Maintenance REPLACING THE BATTERY

I. Remove the screws in the four corners of the control panel.
II. Once the screws are removed, carefully lift the control panel to access the PCB.
III. Refit the control panel onto the PCB.
IV. Refit the four screws.

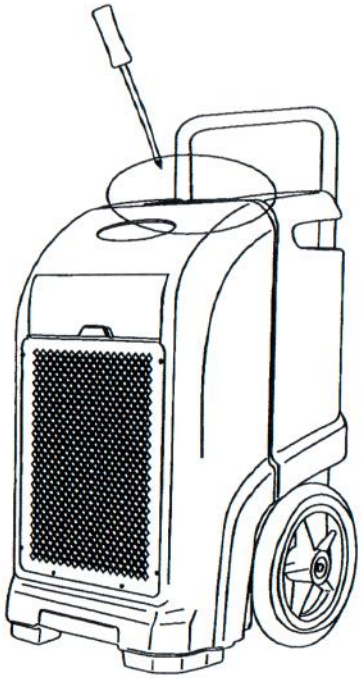

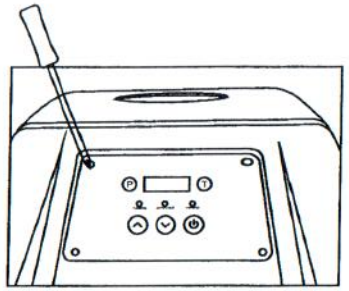

TROUBLE SHOOTING

PROBLEM	CAUSE	SOLUTION
Dehumidifier does not operate	No Power to appliance	Connect plug to power socket
	Switch not turned on	Switch on
	E4 error is displayed	Check drainage flow
Dehumidifier collects little water	Insufficient working time	Allow more working time
	Filter is blocked	Clean filter
	Low ambient temperature	Increase ambient temperature
	Condensate hose is blocked	Check hose for restrictions
Dehumidifier is operating but room is not drying	Doors and windows are open	Seal room from external areas

WARNING:

DO NOT attempt to rectify faults using unqualified personnel.

TROUBLE SHOOTING FAULT CODES

WARNING:

In the event of a fault code, contact your service agent.

CODE	E1	E2	E3	E4
Error Message	Coil sensor error	Humidity sensor error	Low or no refrigerant	Water pump fault or blockage
Display Reading	Flashes every 30 sec's	Flashes every 30 sec's	Flashes continually	Flashes continually
Reason	Timed defrost mode. The dehumidifier is working correctly.	50% R.H displayed Continuous mode in operation	Turn power OFF. Then turn ON again.	Dehumidifier will turn OFF automatically. The fault must be rectified before operation can commence.